TIPA Korea Technology and Information Promotion Agency for SMEs

(max 10 pages)

Technology Proposal for 2026 TIPA* International Joint R&D Program

(TIPA: Korea Technology and Information Promotion Agency for SMEs)

The objective of this Technology Proposal is to introduce the institute's proprietary technologies and present potential collaborative areas for Korean SMEs, facilitating joint research and development projects under the 2026 TIPA International Joint R&D Program. This Technology Proposal will be publicly disclosed in conjunction with the official announcement of the 2026 TIPA International Joint R&D Program.

1. Technology Proposer Information

Proposer	Name	Woongkul Lee	Email	coria-consortium@purdue.edu
Institute Name	Purdue University			
Address	516 Northwestern Ave. West Lafayette, Indiana 47907-2035			

2. Technology Overview

Title of Proposed Technology	**Safe and Swappable Secondary Battery Use for Emerging Grid Application with Modular Power Electronics**			
Korea's 12 National Strategic Technology Fields	Semiconductor/Display ( ), Secondary Battery (√), Advanced Mobility ( ), Next-gen Nuclear Power ( ), Advanced Bio ( ), Aerospace/Marine ( ), Hydrogen ( ), Cybersecurity ( ), AI ( ), Next-gen Communication ( ), Advanced Robotics & Manufacturing ( ), Quantum ( )			
Industrial Technology Classification [1]	**Technology Field 1** (Large Category)		**Technology Field 2** (Large Category)	
	Electrical / Electronics			
	Medium Category	Small Category	Medium Category	Small Category
	Batteries	*Secondary batteries*		
Concept of Proposed Technology	**Core Concept** The proposed technology enables safe, reliable, and cost-effective utilization of secondary (repurposed) batteries for emerging grid applications (e.g., data center, renewable energy, and DC fast charger) through a swappable and reusable modular power electronics architecture based on cascaded H-bridge (CHB) multilevel inverters.			

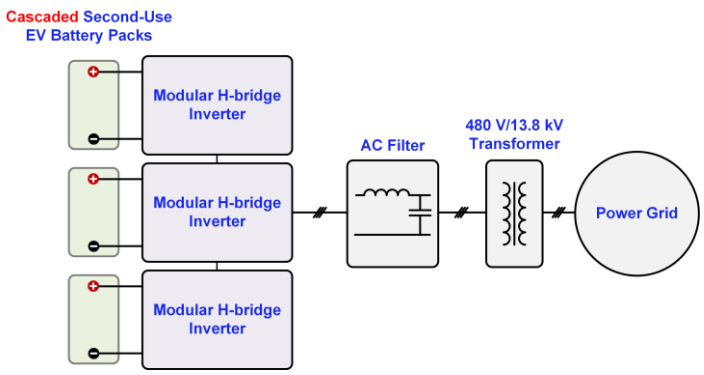

Key Functions and Potential Applications

Each battery module is interfaced with an independent H-bridge cell as shown in the above figure, allowing heterogeneous battery packs or modules with varying in chemistry, capacity, state-of-health (SOH), and degradation history to be flexibly integrated without centralized DC bus constraints. This architecture inherently improves system fault tolerance, scalability, and maintainability, while enabling selective isolation or replacement of degraded battery modules.

Another key innovation is an advanced in-situ battery monitoring system that leverages inverter-injected high-frequency excitation signals to continuously estimate battery internal impedance, SOH, aging state, and safety-critical anomalies (e.g., internal short precursors) without additional sensors or system downtime. The combined power conversion and diagnostics platform support grid-connected applications such as energy storage systems (ESS), peak shaving, renewable energy buffering, data center back-up power, and microgrids, while significantly reducing cost and safety barriers associated with secondary battery deployment.

Rationale for Joint R&D Project

Critical Technical Barriers

The key technical barriers stem from the inherent heterogeneity of secondary batteries, whose variations in chemistry, capacity, and SOH make stable CHB operation and accurate module-level control highly challenging. Ensuring reliable fault detection and rapid isolation of degraded modules is critical, yet difficult, due to the risk of cascading failures in modular multilevel architectures. In addition, achieving precise in-situ diagnostics using high-frequency excitation signals remains a major barrier because switching noise, harmonic interference, and complex degradation mechanisms hinder accurate impedance and SOH estimation. Safety assurance for aged batteries with unknown usage histories—especially early detection of internal shorts or thermal precursors—also poses significant difficulty. Finally, deploying such heterogeneous modules at grid scale requires advanced control, protection coordination, and harmonic compliance strategies to meet utility-grade performance requirements. Joint R&D is essential to successfully realize this technology due to complementary strengths and critical capability gaps between Purdue University and Korean SMEs.

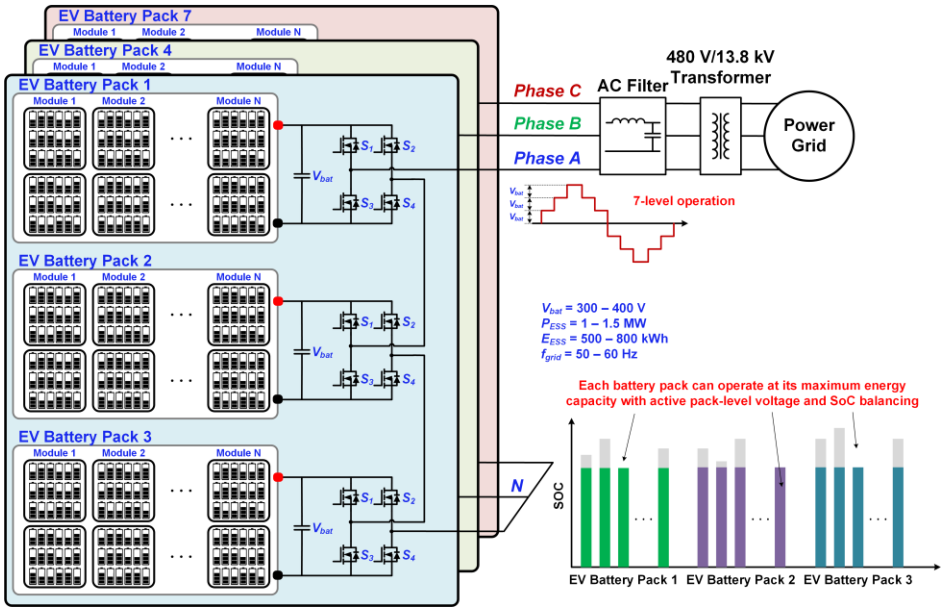

Why Global Collaboration?

Purdue University possesses core intellectual property and expertise in cascaded H-bridge inverter design, control, grid integration, and high-frequency signal-injection-based battery diagnostics, as well as system-level modeling and experimental validation of advanced power electronics architectures. However, Purdue currently lacks access to large-scale secondary battery supplies, disassembly, industrial battery characterization infrastructure, and field-representative testing environments necessary to validate the technology at practical scale.

In contrast, Korean SMEs have strong capabilities in secondary battery sourcing, pack disassembly, battery testing, safety evaluation, and manufacturing-oriented validation, but often lack advanced grid-interactive inverter platforms and embedded diagnostic algorithms tailored for heterogeneous second-life batteries.

This joint R&D project uniquely combines Purdue's advanced inverter and grid-integration technologies with Korean SMEs' battery assets and testing infrastructure, enabling rapid technology maturation and risk reduction.

Key Words

1. Secondary battery reuse
2. Cascaded inverter topology
3. Battery swapping
4. In-situ health monitoring
5. Advanced secondary battery modeling

3. Research and Development Objectives & Plan

Technology Readiness Level (TRL)[2]	Start of the Project	Level (3)	End of the Project	Level (6)

R&D Objectives

R&D Objectives

The proposed technology aims to develop a swappable and reusable CHB-based modular power electronics platform that can stably integrate heterogeneous secondary batteries while ensuring safe, reliable, and cost-effective operation in grid applications.

Detailed Objectives

- Develop a modular, swappable cascaded H-bridge inverter architecture optimized for heterogeneous secondary batteries

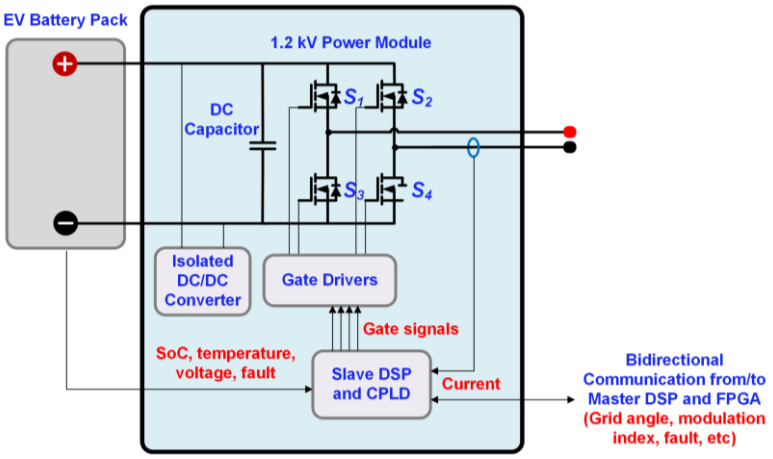

- Develop >30 kW H-bridge module with slave-master control architecture for scalability

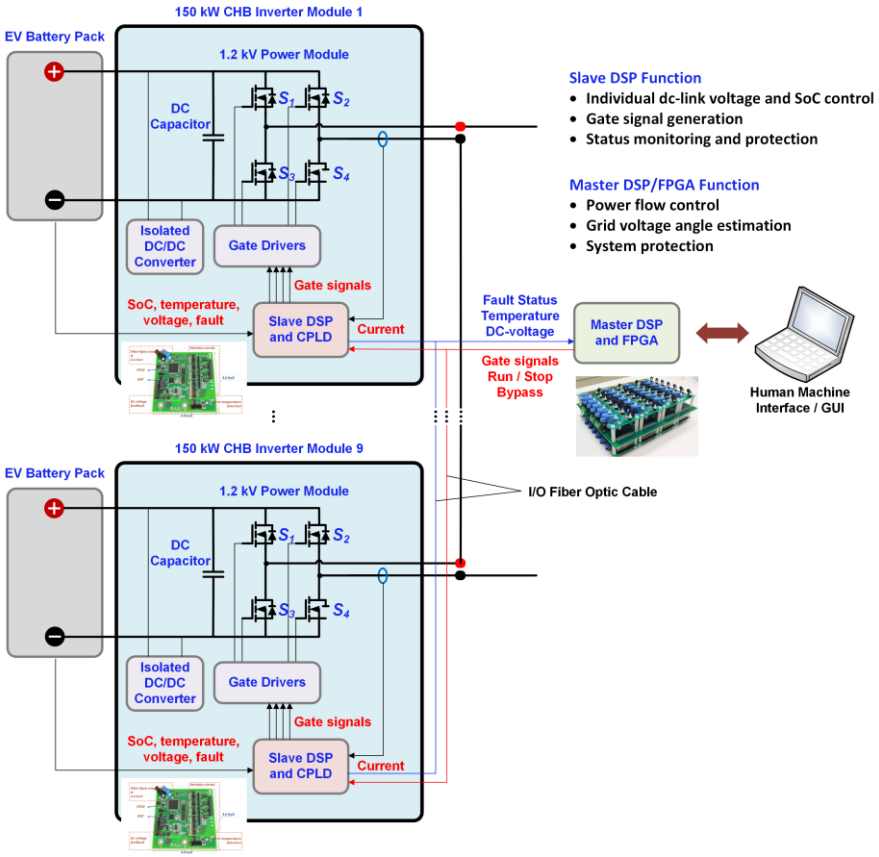

- Implement inverter-embedded high-frequency signal injection for real-time SOH, impedance, and safety diagnostics
- Demonstrate safe grid interconnection and power dispatch using mixed-condition second-life battery modules

R&D Target Specifications

Key Performance Indicator	Target Value
Modular inverter cell rating	> 30 kW per H-bridge module
System scalability	> 300 kW CHB-based ESS prototype
SOH estimation accuracy	±3% compared to reference measurements

R&D Plan

Phase 1 (Year 1): Architecture & Algorithm Development

- CHB inverter topology optimization for secondary batteries
- High-frequency signal-injection modeling and simulation
- Control strategies for module-level battery SOH and SOC balancing

Phase 2 (Year 2): Prototype Development & Diagnostics Integration

- Hardware development of modular H-bridge inverter cells
- Integration of in-situ battery monitoring algorithms
- Laboratory-scale testing with heterogeneous secondary batteries

Phase 3 (Year 3): Pilot-Scale Demonstration & Validation

- Assembly of ≥30 kW grid-connected CHB ESS
- Safety, reliability, and long-term cycling tests
- Grid-interactive demonstration and commercialization roadmap development

4. R&R (Roles and Responsibilities)

Expected R&R of Research Institute	● Design and development of >30 kW cascaded H-bridge inverter module development ● Control, modulation, and grid-integration algorithm development ● High-frequency signal-injection diagnostics and SOH estimation methods ● System modeling, simulation, and laboratory validation ● Joint supervision of graduate researchers and technical reporting
Expected R&R of Korean SME Partner	● Sourcing, characterization, and preparation of secondary battery modules ● Battery pack disassembly, safety testing, and aging evaluation ● Pilot-scale system integration and environmental testing ● Manufacturing feasibility assessment and cost analysis ● Commercialization strategy and domestic/overseas market exploration

5. Expected Outcomes/Impact

Expected Outcomes and Impact	This joint R&D project will deliver a validated, modular power electronics platform enabling safe and economical deployment of secondary batteries in grid applications. Key impacts include: ● Technological: Breakthrough integration of inverter-embedded diagnostics with modular CHB ESS enabling continuous battery swapping while improving ESS safety ● Economic: Significant reduction in ESS downtime due to the battery issue through modularity and advanced CHB inverter operation and extended lifecycle value for secondary batteries ● Industrial: New business opportunities for Korean SMEs in grid-scale ESS and microgrids with advanced inverter topology which has not been commercialized for 2nd-use battery ESS application ● Societal: Enhanced grid resilience and accelerated circular-economy adoption in energy systems by providing battery swapping capability as well as mixed battery use for increasing

6. References

(1) A. Anctil et al, “Economic and environmental feasibility of second-life lithium-ion batteries as fast-charging energy storage,” ACS, 2020.

(2) https://www.bestmag.co.uk/china-verge-banning-large-scale-esss-using-second-life-lithium-ion-batteries/

(3) C. Mi et al, “Cost-effective integration of second-life EV batteries with solar PV systems for commercial building,” IEEE IAS GlobConET Keynote, 2022.

(4) https://www.nrel.gov/docs/fy15osti/63332.pdf

(5) https://www.bcg.com/publications/2020/case-for-circular-economy-in-electric-vehicle-batteries

(6) https://www.bestmag.co.uk/china-verge-banning-large-scale-esss-using-second-life-lithium-ion-batteries/